TUSCARORA
TOWNSHIP

Sewer Project Update

November 5, 2013

Bid Update
USDA Status

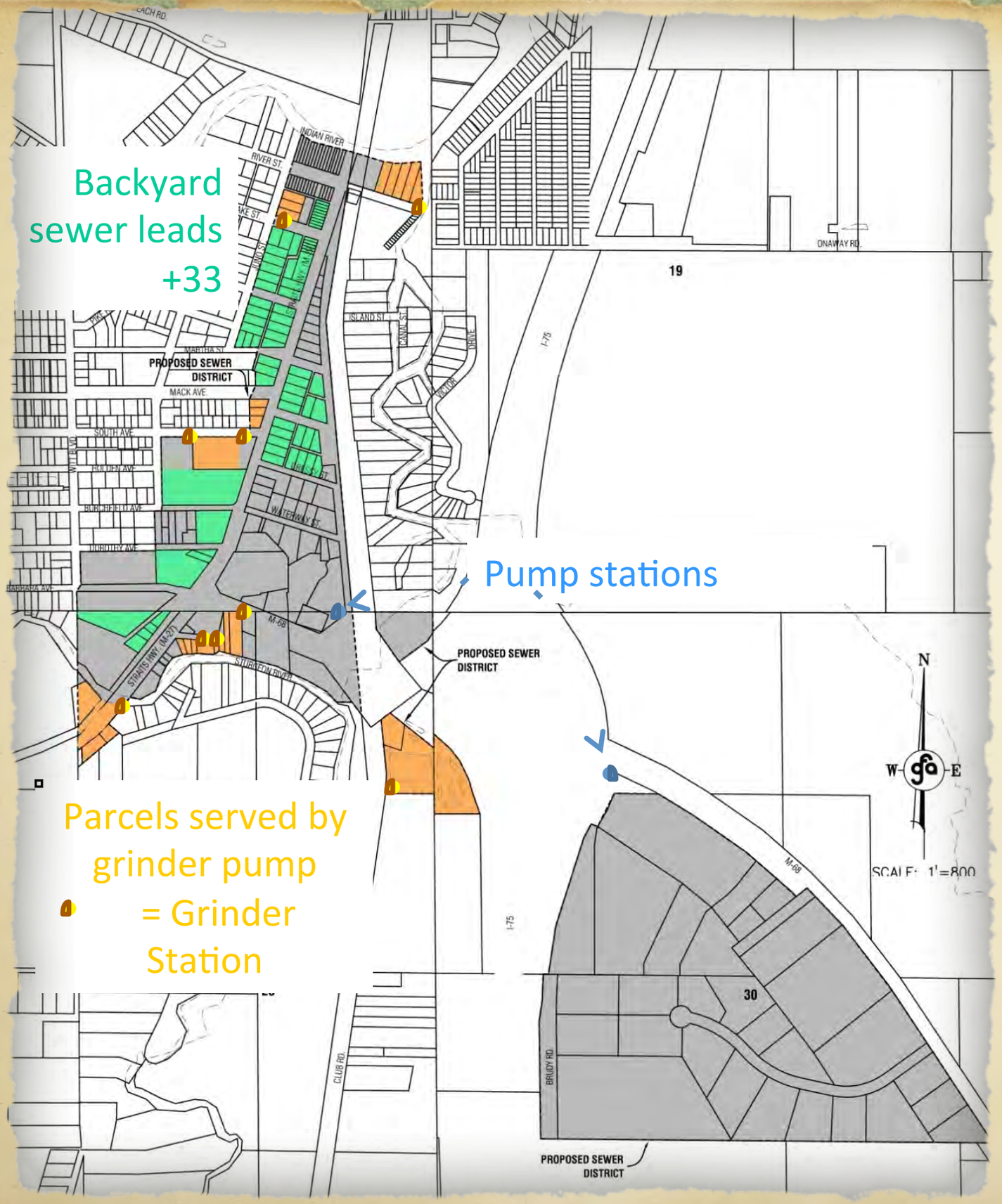

As Rebid Oct. 2013

- 19,000 lf gravity sewer
- 2 pump stations
- 9 grinder stations

TUSCARORA TOWNSHIP

Evolution of System Design

- Confusion about what is in current plan
- Preliminary Design vs Engineering
- Early Layouts were conceptual
- Cannot do engineering until you have a project

McLaren
NORTHERN MICHIGAN
INDIAN RIVER COMMUNITY
MEDICAL CENTER
GRINDER
PUMP
HERE

The Petition

THE COMMITTEE TO BRING WASTEWATER TREATMENT TO INDIAN RIVER

Joe Breed BKC Insurance
Jeff Swadling Ken's Village Market
Mike Cherveny Burt Lake Preservation Association
Bill Jones The Brown Trout Restaurant
Dawn Bodnar Indian River Chamber of Commerce
Mike Ridley Tuscarora Twp. Supervisor
Craig Waldron Far Hills Construction and Tuscarora Township Trustee
Scott Monthei M&M Plumbing & Heating
Matt Kavanaugh Citizens National Bank

"Improving the quality of life in Indian River"

"Once all the steps have been completed the engineering firm (Gourdie-Fraser) will complete plans for the system."

STEP-STEG

- "Several systems have been investigated and the engineering firm, Gourdie-Fraser prepared an estimate for three different systems"
- "The least expensive was a STEP-STEG System. This system would still require septic tanks on individual properties from which solids would still have to be pumped every three to five Years. The treatment facility would be a large drain field (located in Commerce Park) and effluent would either be pumped or fed by gravity into a lift station which in turn would pump it up to the treatment facility."
- "After much discussion and further review, the Sewer Committee determined that a sewer project requiring tank pumping and continued tank maintenance would not be practical and therefore, other options were pursued."

Low pressure/grinder Simplex Grinder

- "A low pressure system was also proposed. This would treat the entire range of sewage disposal and treatment but would require grinder pumps at each user property. Again, discussions regarding the cost, maintenance and potential replacement of the pumps led to further concerns and the Committee began to investigate a full gravity system?

Gravity System

- "The full gravity system would require large main pipe which would run the length of the district along S. Straits Hwy. and M-68 into which several smaller mains would feed sewage. There would be some grinder pumps at properties that sit lower than the main, primarily west of S. Straits Hwy. in the residential section of the district.

As Proposed August 2011 SAD onset

- 16,500 lf gravity sewer
- 2 pump stations
- 8 grinders

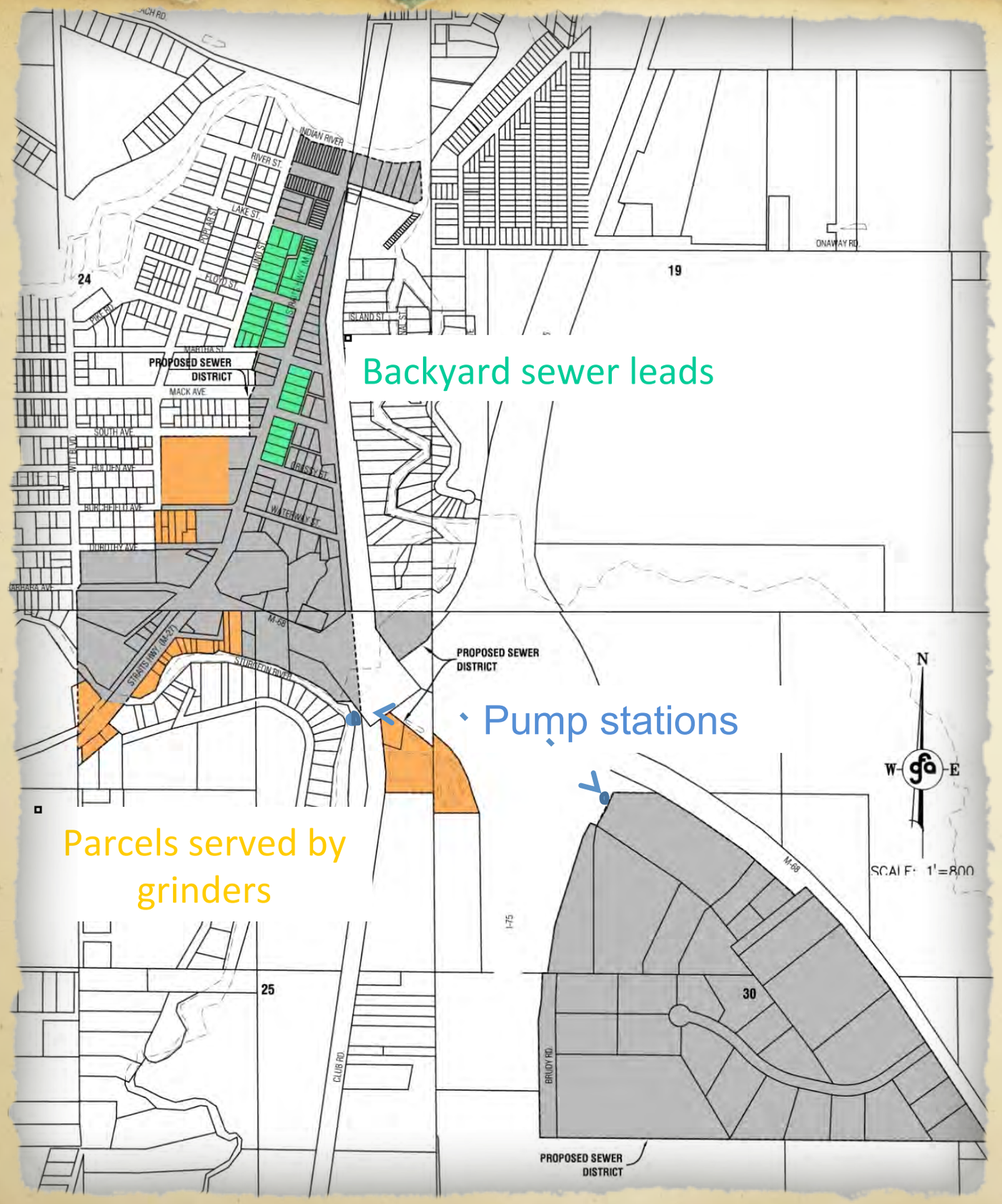

TUSCARORA TOWNSHIP

Gourdie-Fraser
Municipal | Development | Transportation

Traverse City
123 W. Front St.
Traverse City, MI 49684
231-946-5874 Ph
231-946-3703 Fax

www.gourdiefraser.com

OPINION OF PROBABLE CONSTRUCTION COST

TUSCARORA TOWNSHIP SANITARY SEWER SYSTEM
ALTERNATE NO. 1, GRAVITY COLLECTION SYSTEM
ASSUMES SYSTEM COMPONENTS CONSTRUCTED CONCURRENTLY WITH STREET PROJECT
GFA PROJECT NO. 05414
August 18, 2011

No.	Item	Unit	Estimated Quantity	Unit Price	Item Cost
1	Sanitary Sewer, 8"	LF	7,500	$40.00	$300,000.00
2	Sanitary Sewer, 10"	LF	5,000	$45.00	$225,000.00
3	Sanitary Sewer, 12"	LF	4,000	$65.00	$260,000.00
4	Sanitary Force Main, 4"	LF	1,700	$40.00	$68,000.00
5	Low Pressure Sanitary Force Main, 4"	LF	1,500	$30.00	$45,000.00
6	Sanitary Force Main, 10"	LF	6,000	$50.00	$300,000.00
7	Manholes, 4" Dia.	EA	50	$2,000.00	$100,000.00
8	Sanitary Wye Assemblies, 6"	EA	100	$400.00	$40,000.00
9	Sanitary Sewer Leads, 6"	LF	3,000	$30.00	$90,000.00
10	Sanitary Sewer Lead Clean-Out, 6"	EA	30	$150.00	$4,500.00
11	Low Pressure Sewer Leads, 1 1/2"	LF	1,350	$20.00	$27,000.00
12	Service Lead Ball Valves, 1 1/2"	EA	8	$230.00	$1,840.00
13	Service Lead Check Valves, 1 1/2"	EA	8	$200.00	$1,600.00
14	Low Pressure Force Main End Clean-Out Assembly, 4"	EA	1	$3,500.00	$3,500.00
15	Low Pressure Force Main Air Release Structure, 4"	EA	1	$4,000.00	$4,000.00
16	Tankage and Pump	EA	8	$3,500.00	$28,000.00
17	Low Pressure Sanitary Force Main, Directional Drill, 4"	LF	500	$30.00	$15,000.00
18	Sanitary Force Main, Directional Drill, 10"	LF	700	$57.00	$39,900.00
19	Lift Station #1, 500 gpm @ 90 TDH, 10" Discharge	LS	1	$115,000.00	$115,000.00
20	Lift Station #2, 100 gpm @ 68 TDH, 4" Discharge	LS	1	$105,000.00	$105,000.00
21	Plug Valves, 10"	EA	4	$3,000.00	$12,000.00

No.	Item	Unit	Estimated Quantity	Unit Price	Item Cost
22	Plug Valves, 4"	EA	1	$2,600.00	$2,600.00
23	Air Release Structure, 10"	EA	4	$2,800.00	$11,200.00
24	Clean-Out Assembly, 10"	EA	4	$3,500.00	$14,000.00
25	Air Release Structure, 10"	EA	1	$2,800.00	$2,800.00
26	Clean-Out Assembly, 10"	EA	1	$2,600.00	$2,600.00
27	Bore and Jack Steel Casing, 8"	LF	100	$195.00	$19,500.00
28	Bore and Jack Steel Casing, 16"	LF	550	$225.00	$123,750.00
29	Bore and Jack Steel Casing, 20"	LF	70	$275.00	$19,250.00
30	Bore and Jack Steel Casing, 24"	LF	150	$300.00	$45,000.00
31	Patch/Replace Asphalt Road	SY	2,000	$20.00	$40,000.00
32	Patch/Replace Gravel Road	SY	2,000	$15.00	$30,000.00
33	Patch/Replace Asphalt Drive	SY	500	$30.00	$15,000.00
34	Patch/Replace Concrete Drive	SF	3,000	$3.00	$9,000.00
35	Replace Concrete Side Walk	SF	100	$4.75	$475.00
36	Replace Concrete Curb	LF	100	$25.20	$2,520.00
37	Patch/Restore Snow-Mobile Trail	SY	100	$15.00	$1,500.00
38	Topsoil, Seed, Mulch and Fertilize	SY	22,000	$3.00	$66,000.00
39	Silt Fence	LF	1,000	$3.00	$3,000.00
				ESTIMATED CONSTRUCTION COST	$2,193,535.00
				10% CONTINGENCY	$219,000.00
				ENGINEERING, ADMINISTRATIONS, CONSTRUCTION SERVICES	$340,000.00
				TOTAL ESTIMATED CONSTRUCTION COST	$2,752,535.00

- These costs are based on preliminary information. The actual site conditions may result in variations of unit prices or items.
- Costs for financing, land, right-of-way, easement acquisition, and permit fees are not included in this cost estimate.
- This cost estimate is approximate. Actual construction bids may vary significantly from this statement of probable costs due to timing of construction, changed conditions, labor rate changes, or other factors beyond the con
- This estimate is based on the drawing included in this report

TUSCARORA TOWNSHIP

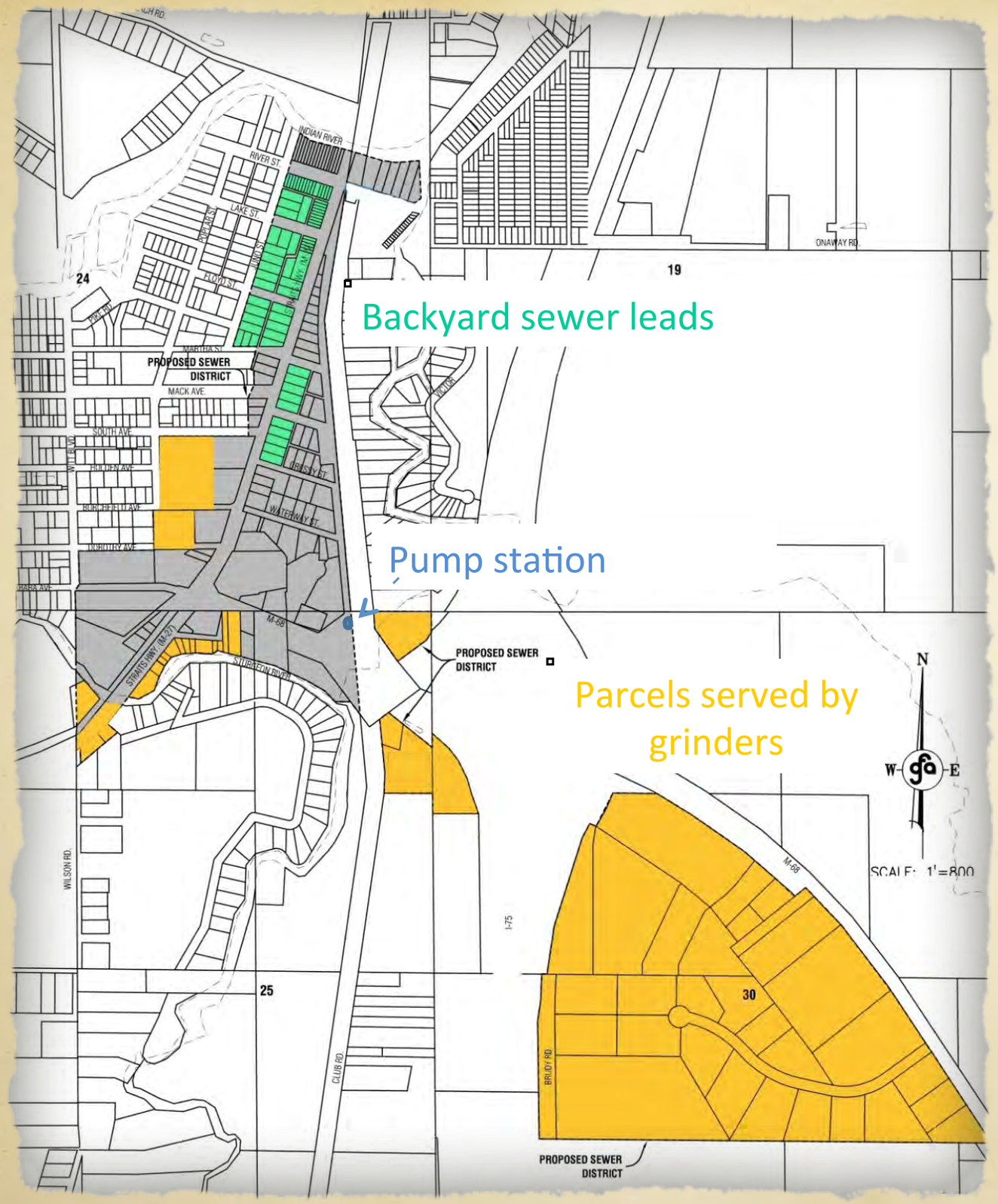

As defined May, 2012 to meet USDA loan of $2.7M

- 11,000 lf gravity sewer
- 40 grinder stations
- One pump Station

TUSCARORA TOWNSHIP

Gourdie-Fraser
Municipal | Development | Transportation

Traverse City
123 W. Front St.
Traverse City, MI 49684
231-946-5874 Ph
231-946-3703 Fax

www.gourdiefraser.com

OPINION OF PROBABLE CONSTRUCTION COST

TUSCARORA TOWNSHIP SANITARY SEWER SYSTEM
ALTERNATE NO. 1, GRAVITY/LOW PRESSURE COLLECTION SYSTEM
ASSUMES SYSTEM COMPONENTS CONSTRUCTED CONCURRENTLY WITH STREET PROJECT
GFA PROJECT NO. 05414
May 23, 2012

No.	Item	Unit	Estimated Quantity	Unit Price	Item Cost
1	Sanitary Sewer, 12"	LF	5,500	$50.00	$275,000.00
2	Sanitary Sewer, 8"	LF	5,500	$40.00	$220,000.00
3	Sanitary Force Main, 6"	LF	6,000	$45.00	$270,000.00
4	Manholes, 4" Dia.	EA	50	$2,000.00	$100,000.00
5	Sanitary Wye Assemblies, 6"	EA	100	$400.00	$40,000.00
6	Sanitary Sewer Leads, 6"	LF	1,500	$30.00	$45,000.00
7	Sanitary Sewer Lead Clean-Out, 6"	EA	30	$150.00	$4,500.00
8	Low Pressure Sewer, 1 1/2"	LF	8,000	$20.00	$160,000.00
9	Service Lead Ball Valves, 1 1/2"	EA	40	$230.00	$9,200.00
10	Service Lead Check Valves, 1 1/2"	EA	40	$200.00	$8,000.00
11	Tankage and Pump	EA	40	$5,000.00	$200,000.00
12	Low Pressure Sanitary Force Main, Directional Drill, 2"	LF	500	$30.00	$15,000.00
13	Sanitary Force Main, Directional Drill, 6"	LF	700	$60.00	$42,000.00
14	Lift Station #1, 6" Discharge	LS	1	$130,000.00	$130,000.00
15	Plug Valves, 6"	EA	5	$3,000.00	$15,000.00
16	Air Release Structure, 6"	EA	5	$2,800.00	$14,000.00
17	Clean-Out Assembly, 6"	EA	5	$4,000.00	$20,000.00
18	Patch/Replace Asphalt Road	SY	2,000	$20.00	$40,000.00
19	Patch/Replace Gravel Road	SY	2,000	$15.00	$30,000.00
20	Patch/Replace Asphalt Drive	SY	500	$30.00	$15,000.00
21	Patch/Replace Concrete Drive	SF	3,000	$3.00	$9,000.00

No.	Item	Unit	Estimated Quantity	Unit Price	Item Cost
22	Replace Concrete Side Walk	SF	3,600	$5.00	$18,000.00
23	Replace Concrete Curb	LF	1,000	$25.00	$25,000.00
24	Topsoil, Seed, Mulch and Fertilize	SY	22,000	$3.00	$66,000.00
25	Silt Fence	LF	1,000	$3.00	$3,000.00
				ESTIMATED CONSTRUCTION COST	$1,773,700.00
				10% CONTINGENCY	$177,370.00
				ENGINEERING, DESIGN & CONSTRUCTION SERVICES	$423,400.00
				TOTAL ESTIMATED CONSTRUCTION COST	$2,374,449.80

These costs are based on preliminary information. The actual site conditions may result in variations of unit prices or items.
Costs for financing, land, right-of-way, easement acquisition, and permit fees are not included in this cost estimate.
This cost estimate is approximate. Actual construction bids may vary significantly from this statement of probable costs due to timing of construction, changed conditions, labor rate changes, or other factors beyond the control of GFA.
This estimate is based on the drawing included in this report

TUSCARORA TOWNSHIP

Start actual Engineering

- Sign Gourdie-Fraser Contract - June 21, 2012
  - Base mapping
  - Elevations
  - Surveying
- Begin Design process

TUSCARORA TOWNSHIP

- **GF plan to move mains off main street**
  - Not dependent on DDA street scape schedule
  - Could do work in summer with minimal disruptions
- **Hook ups behind buildings**
  - lower cost hookups
  - less disturbance to business entrances

TUSCARORA TOWNSHIP

First look at new concept

- A decent size piece of main still in front
- Grinder Pumps

How could we move everything to back

- Easements
- Fewer Grinder Pumps

What if?

- Additional Easements - 14 total
- Deeper Mains
- Add a pump station

TUSCARORA TOWNSHIP

Bid Design

- 1 Main pump station
- 2 intermediate pump stations
- deeper gravity mains
- approx. 25,000 ln. ft. gravity mains

TUSCARORA
TOWNSHIP

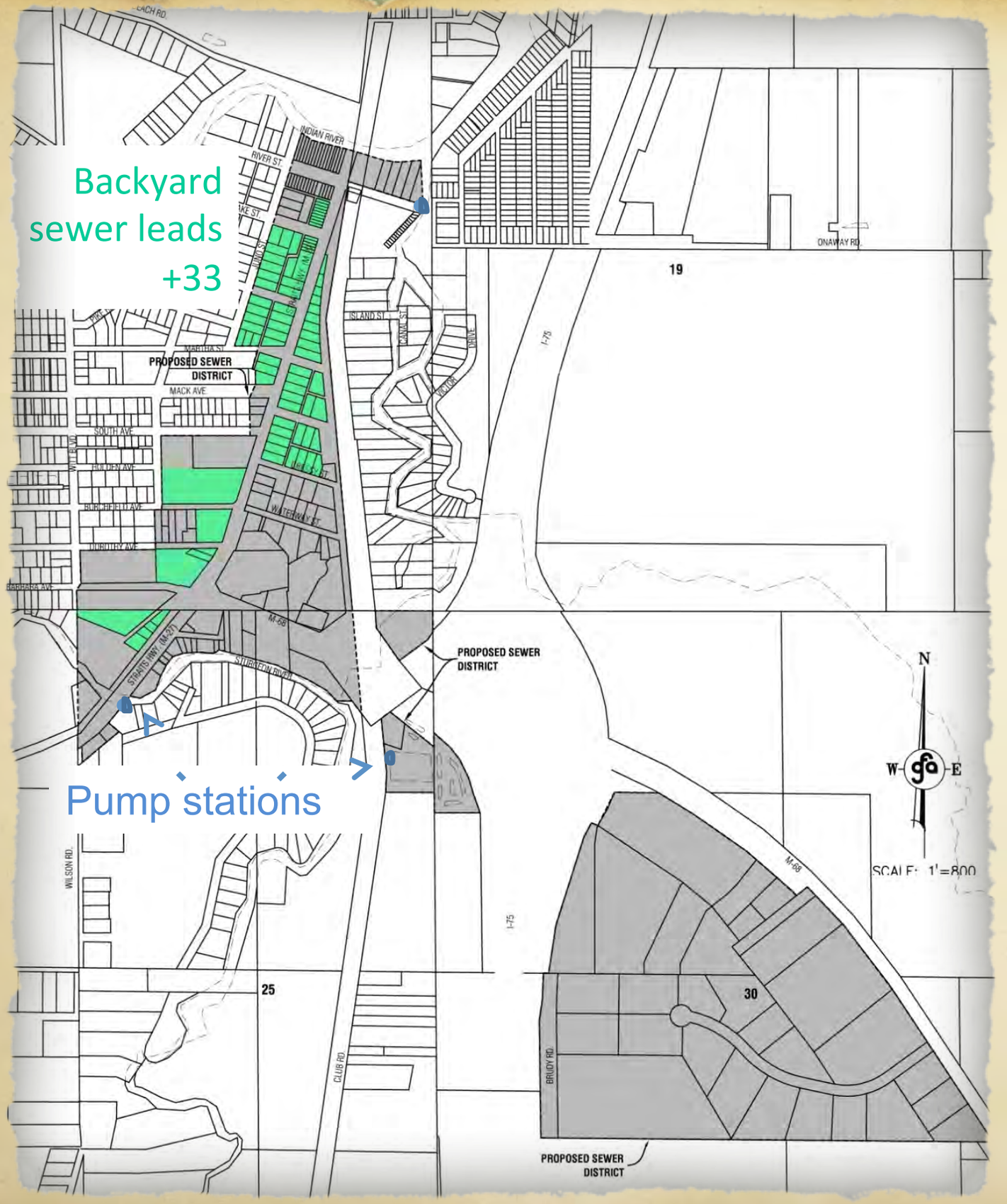

As Bid July 2013

- 25,000 lf gravity sewer (0 grinders)
- 3 pump stations
- No Grinder Stations

TUSCARORA TOWNSHIP

First Bid July 25th

Collection System over budget

- What did we learn
  - Actual bid prices to evaluate unit pricing
    - pipe cost per foot

Redesign based on bid pricing

You look at things different at $80/ft than $30 ft.

TUSCARORA TOWNSHIP

Current Design

- Gravity system with some grinder pumps in low areas
- 2 pump stations
- gravity mains not as deep
- less ln. ft. gravity mains

Right back to where we started

TUSCARORA TOWNSHIP

As Rebid Oct. 2013

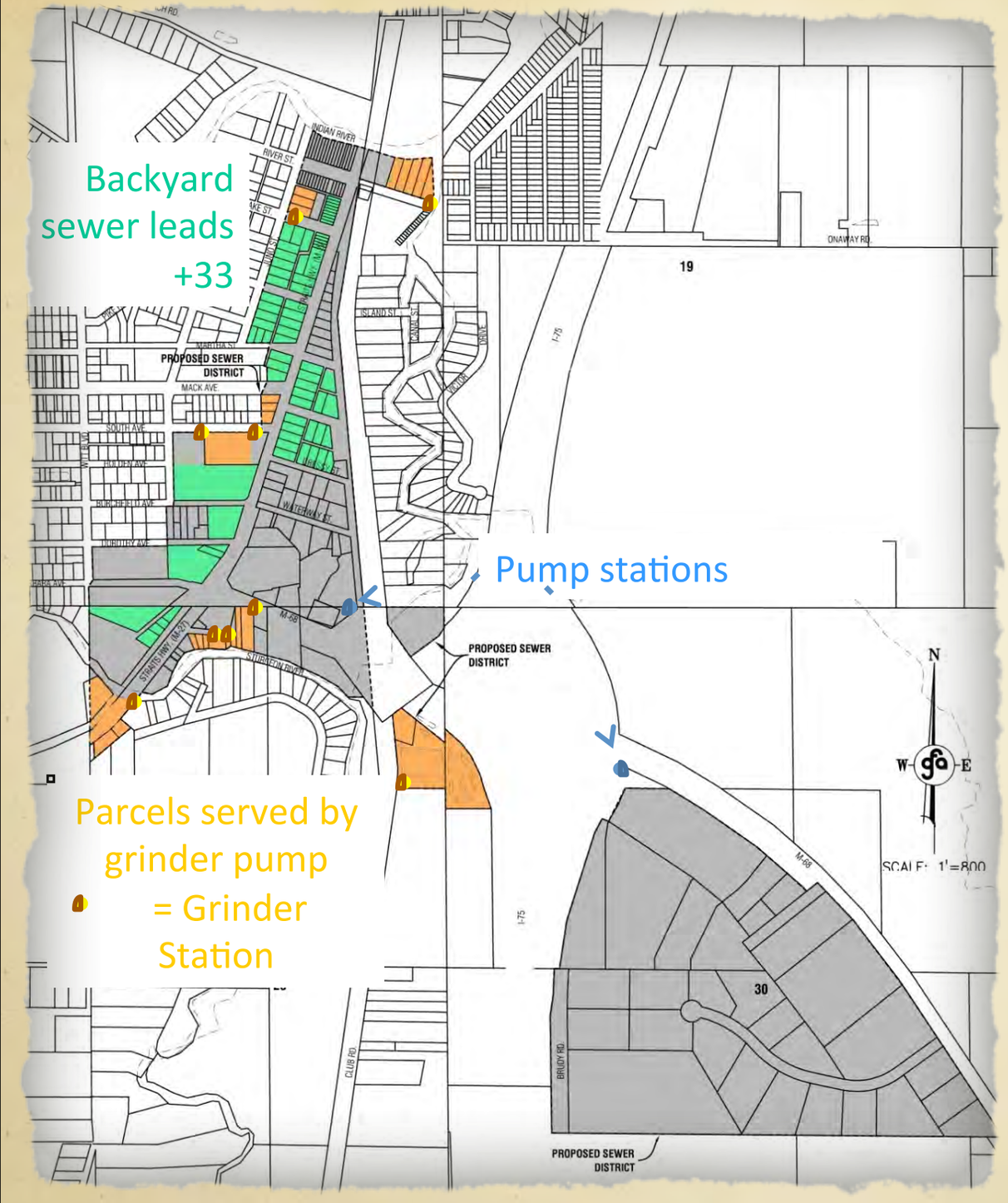

19,000 lf gravity sewer
2 pump stations - 9 grinder stations

As Proposed August 2011 SAD onset

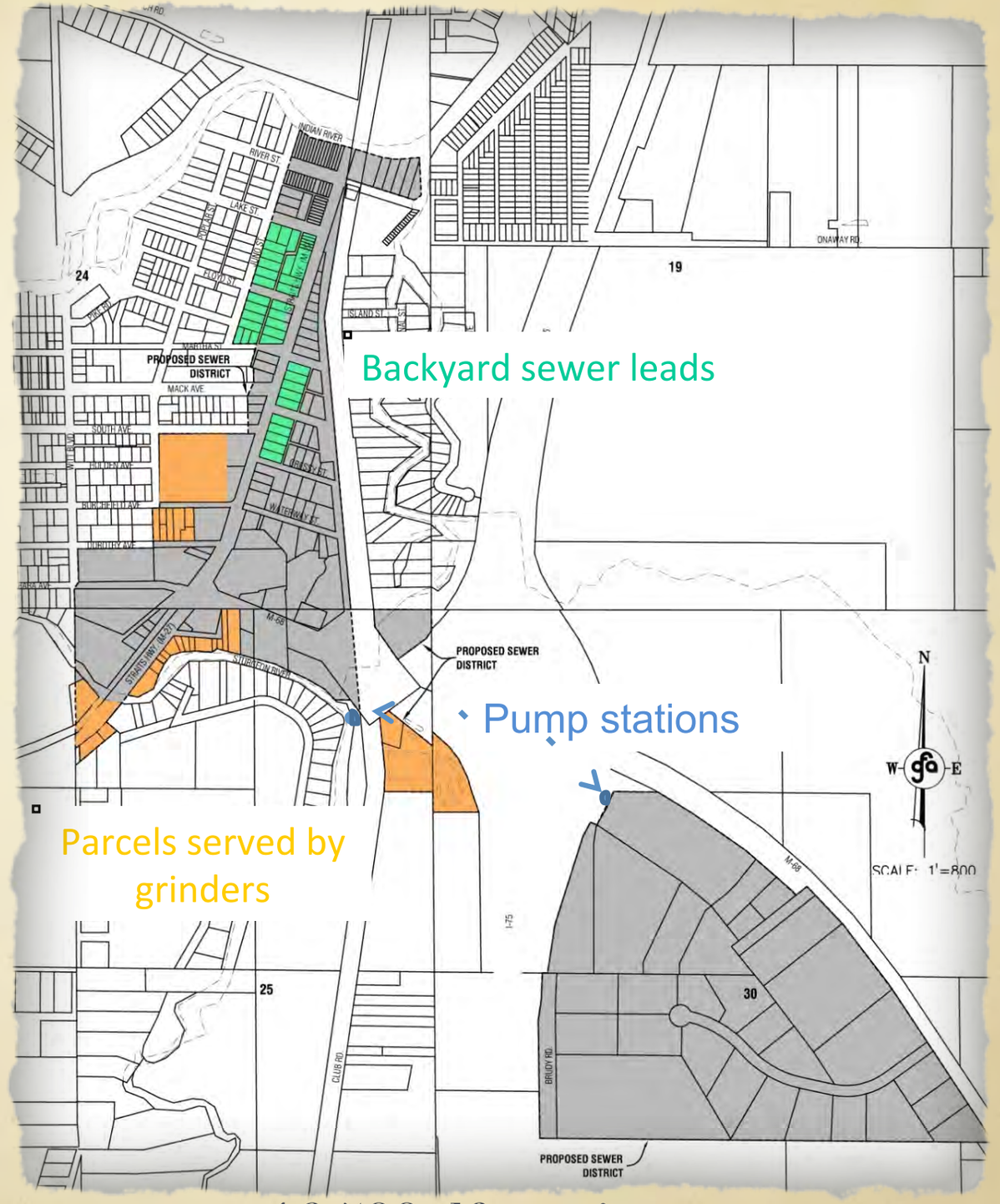

16,500 lf gravity sewer
2 pump stations - 8 grinder stations

Pump Stations - Grinder Pumps

Almost all sewer systems require some type of pump
sewage runs downhill and then must be pumped

- Large Pump Station
- Intermediate Pump Station
- Duplex grinder
- Simplex grinder
- Sewage ejector

TUSCARORA
TOWNSHIP

Large Pump Station

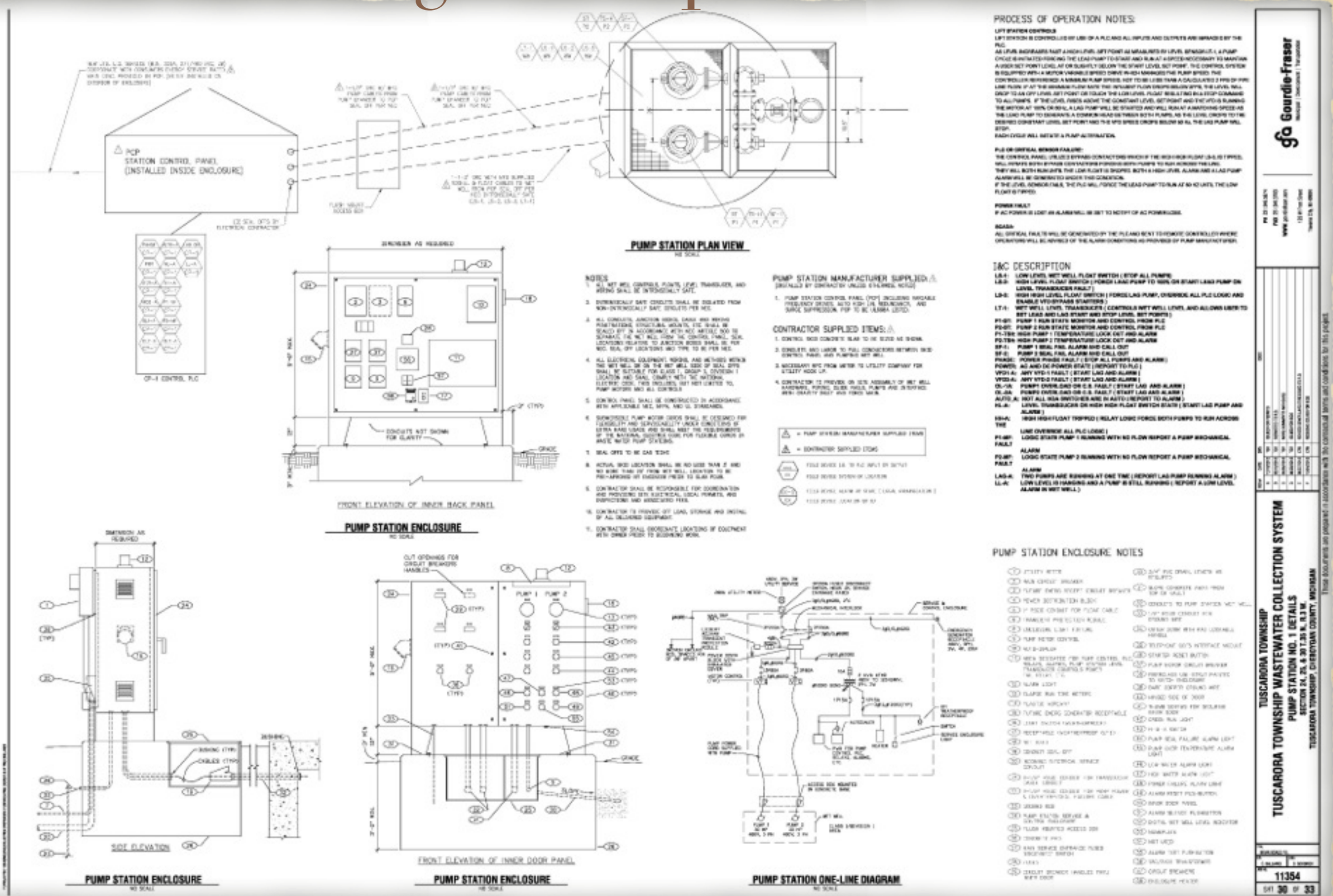

Intermediate Pump Station

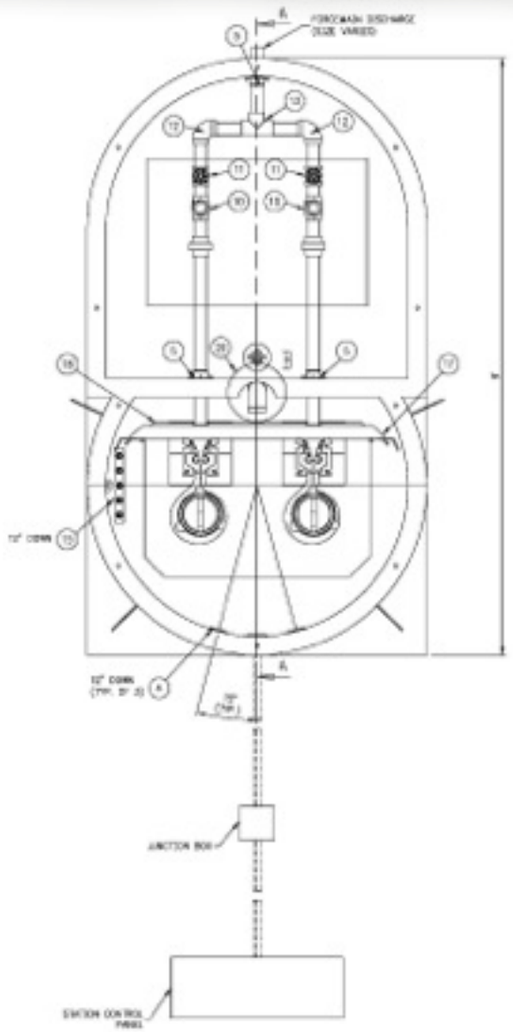

PUMP STATION PLAN VIEW

SCALE: NOT TO SCALE

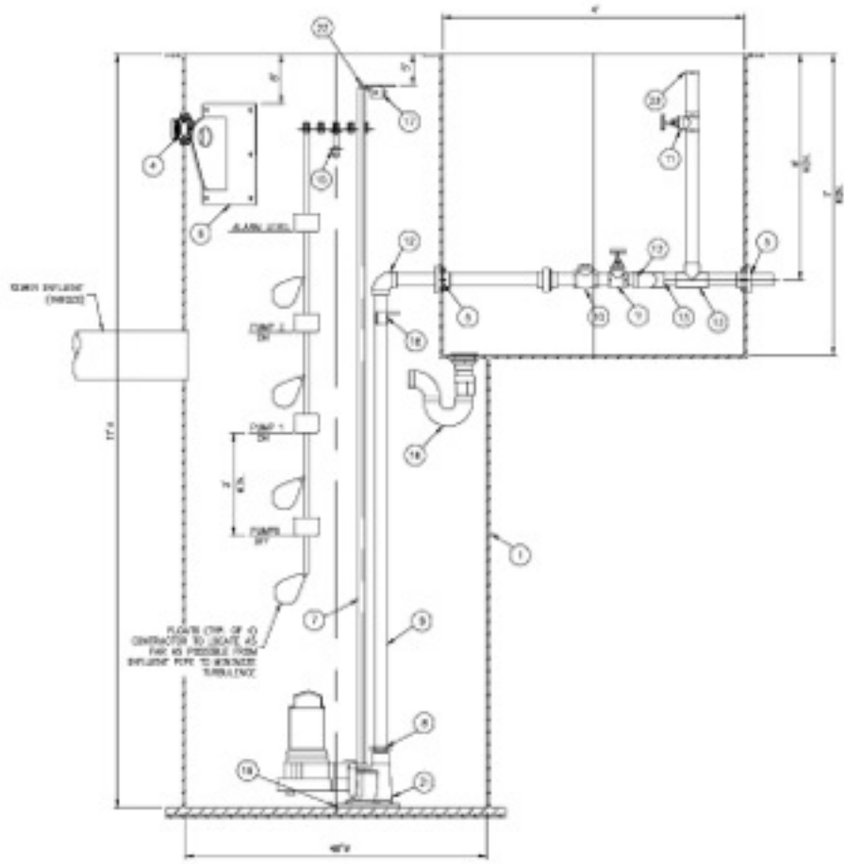

PUMP STATION SECTION

SCALE: NOT TO SCALE

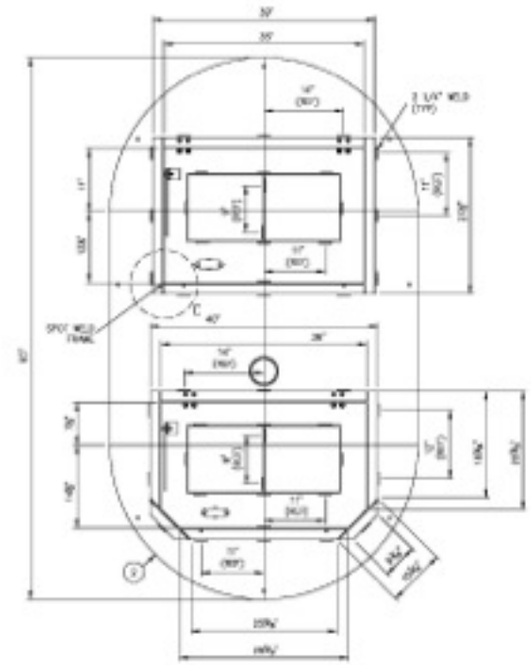

PUMP STATION PLAN VIEW

SCALE: NOT TO SCALE

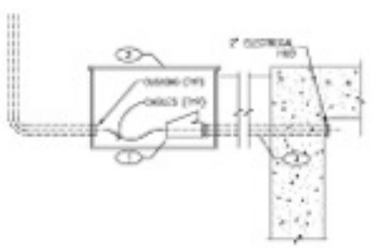

JUNCTION BOX DETAIL

SCALE: NOT TO SCALE

NOTES:

1. CONDUIT SCH-80
2. LIGHT REINFORCED GASKETS (TYP)
3. 1/2" FIBER CONDUIT FOR GROUND WIRE

PUMP STATION MANUFACTURER SUPPLIED ITEMS

ITEM NO.	DESCRIPTION
1	48" X 120" FG EMPTY WEIGHT, WITH FLOAT & 48" X 48" FOUNDATION
2	ALUMINUM HATCH COVER
3	4" ALUMINUM COUPLING - WELDED ON COVER
4	1 1/2" THREADED BOLT-ON FG COMPOSITE COUPLING
5	FLEX BOOT FITTING FOR PIPING
6	I.E. STEEL LIFTING LUG
7	3/4" 304 STAINLESS STEEL PIPE
8	THREADED SCH80 PVC BUSHING AS NEEDED
9	2" SCH80 PVC FDTC
10	2" BRASS THREADED SWING CK VALVE
11	2" BRASS THREADED GATE VALVE
12	2" SCH80 PVC BOFDLOOM (SW)
13	2" SCH80 PVC TEE (SW)
14	2" SCH80 PVC UNION (SW)
15	304 SS FLOAT BRACKET W/5 CORD DROPS & MOUNTING BRACKET
16	PVC RUBBER SPLIT SWEEP WITH CHECK VALVE (GAS AND WATER TIGHT)
17	ALUMINUM UPPER GUIDERAIL BRACE FOR 48" TANK
18	ALUMINUM SHOPPING BRACING FOR 48" BASIN
19	5/8" X 10" X 10" D-DRILLED FIBERGLASS STUD BASE PLATE
20	VENT W/ STAINLESS STEEL GUARD NIPPLE
20	2" QUICK DISCONNECT COUPLER & CAP, COORDINATE WITH OWNER FOR COMPATIBILITY

CONTRACTOR SUPPLIED ITEMS

ITEM NO.	ITEMS TO BE SHIPPED LOOSE
21	FLYGT 3" BASE ELBOW
22	UPPER GUIDERAIL BRACKET

GRINDER PUMP NOTES

1. SYSTEM PACKAGE SHALL BE SUPPLY SYSTEM AS SUPPLIED BY ABWR PUMP AND SUPPLY, POWERED REDUNDANT, REMOTE SUPPLY OR ENGINEER APPROVED EQUAL AND INCLUDED (REFER TO SPECIFICATION 12A FOR ADDITIONAL DETAILS)
   A. 4' DIA. FIBERGLASS SUMP AND VALVE CHAMBER WITH 24" MIN. ACCESS OPENING AND COVER
   B. EXPLOSION PROOF GRINDER PUMPS, 3HP MODEL 2GG 3
   C. C-2 DUT RUDDE MAILS
   D. CONTROL SYSTEM:
      - AUTOMATIC WITH FOUR DIS FLOATS
      - MANUAL INDEPENDENT OF FLOATS
   E. PTS WITH AUDIBLE/VISUAL ALARM SYSTEM:
      - PUMP FAILURE
      - HIGH WATER LEVEL
      - POWER FAILURE
      - SEAL FAILURE
   F. CONTROL PANEL LOCKABLE NEMA 3R ENCLOSURE:
      - MAIN DISCONNECT
      - VARIABLE FREQUENCY DRIVES VOLTAGE FAILURE AND OVERLOAD PROTECTION (SURGE SUPPRESSION)
      - H-O-A SWITCHES
      - CONTROL CIRCUIT BREAKER
      - GFI RECEPTACLE
      - ELAPSED TIME METERS
      - SPACE HEATER W/ THERMOSTAT
      - GENERATOR SET RECEPTACLE
      - MANUAL TRANSFER SWITCH
      - APPLICABLE FUSES, CIRCUIT BREAKERS, CONTACTS AND RELAYS
   G. GRINDER IN-GRADE JUNCTION BOX
   H. EXTERNAL DISCHARGE PIPING AND VALVES
   I. 3AM WARRANTY, START-UP, AND WARRANTY FOR SPECIFICATIONS
2. PUMP TANK AND ALARM LEVELS SHALL BE DETERMINED AT THE TIME OF INSTALLATION BASED UPON TANK LOCATIONS AND SEWER LINE CONNECTIONS. CONTRACTOR SHALL COORDINATE WITH ENGINEER AND OWNER.
3. CONTRACTOR SHALL BE RESPONSIBLE FOR ELECTRICAL SERVICE INCLUDING METER BASE INSTALLATION TO CONTROL PANEL AND COORDINATE WITH UTILITY COMPANY AND OWNER AND SIZED APPROPRIATELY TO SERVICE STATION.
4. PROPOSED PUMPS HAVE BEEN SELECTED BASED ON ASSUMPTIONS OF SEWER LINE SIZING AND LOCATIONS. DURING CONSTRUCTION THE CONTRACTOR SHALL COORDINATE WITH ENGINEER AND OWNER TO ADJUST PUMPS AS NECESSARY BASED UPON FIELD INFORMATION.
5. ALL WET WELL CONTROLS, FLOATS, AND WIRING SHALL BE INTRINSICALLY SAFE.
6. INTRINSICALLY SAFE CIRCUITS SHALL BE ISOLATED FROM NON-INTRINSICALLY SAFE CIRCUITS PER NEC.
7. ALL CONDUITS, JUNCTION BOXES, CABLE PENETRATIONS, STRUCTURAL MOUNTS, ETC. SHALL BE SEALED OFF IN ACCORDANCE WITH NEC ARTICLE 500 TO SEPARATE THE WET WELL FROM THE CONTROL PANEL. SEAL LOCATIONS RELATIVE TO JUNCTION BOXES SHALL BE PER NEC.
8. ALL ELECTRICAL EQUIPMENT, WIRING, AND METHODS WITHIN THE WET WELL SHALL BE SUITABLE FOR CLASS 1, GROUP D, DIVISION 1 LOCATION AND SHALL COMPLY WITH THE NATIONAL ELECTRIC CODE.
9. CONTROL PANEL SHALL BE UL LISTED NEMA 3R AND CONSTRUCTED IN ACCORDANCE WITH APPLICABLE NEC AND NFPA STANDARDS.
10. SUBMERSIBLE PUMP MOTOR CORDS SHALL BE DESIGNED FOR FLEXIBILITY AND SERVICEABILITY UNDER CONDITIONS OF EXTRA HARD USAGE AND SHALL MEET THE REQUIREMENTS OF THE NATIONAL ELECTRIC CODE FOR TURBINE TYPES IN WASTE WATER PUMP SYSTEMS.
11. CONTRACTOR SHALL BE RESPONSIBLE TO VERIFY WATER TABLE AND COORDINATE WITH ENGINEER FOR SUBMITTAL TO ADJUST BALLAST VOLUME AND INSTALL AS NECESSARY AT NO ADDITIONAL COST TO THE PROJECT. APPROX. 4 CY OF EXTERNAL CONCRETE BALLAST ARE ESTIMATED AND SHALL BE PROVIDED IN ADDITION TO INTEGRAL BASE SHOWN IN THE DRAWING FOR SYSTEM.
12. ELECTRICAL SERVICE, JUNCTION BOX, METER BASE, AND ANY OTHER EQUIPMENT PROVIDING POWER TO THE CONTROL PANEL AND INSTALLATION OF SHALL BE COORDINATED WITH CONSUMERS ENERGY AND PUMP STATION SUPPLIER.
13. CONTRACTOR SHALL BE RESPONSIBLE TO VERIFY WATER TABLE AND COORDINATE WITH ENGINEER FOR SUBMITTAL TO ADJUST BALLAST VOLUME AND INSTALL AS NECESSARY AT NO ADDITIONAL COST TO THE PROJECT. APPROX. 4 CY OF EXTERNAL CONCRETE BALLAST ARE ESTIMATED AND SHALL BE PROVIDED IN ADDITION TO INTEGRAL BASE SHOWN IN THE DRAWING FOR SYSTEM.
14. STAINLESS STEEL TO BE USED FOR ALL ANGLE IRON, PLATES, BRACKETS, AND FITTINGS INSIDE PUMP STATION. ALL EXHAUST TO BE LISTED CORROSIVE RESISTANT AND RUSS.

gfa Gourdie-Fraser

TUSCARORA TOWNSHIP

TUSCARORA TOWNSHIP WASTEWATER COLLECTION SYSTEM

PUMP STATION NO. 2 DETAILS

SECTION 24, 25, & 30 T.35 N., R.3 W.

TUSCARORA TOWNSHIP, CHEBOYGAN COUNTY, MICHIGAN

11354

SHT 31 OF 33

Duplex Pump

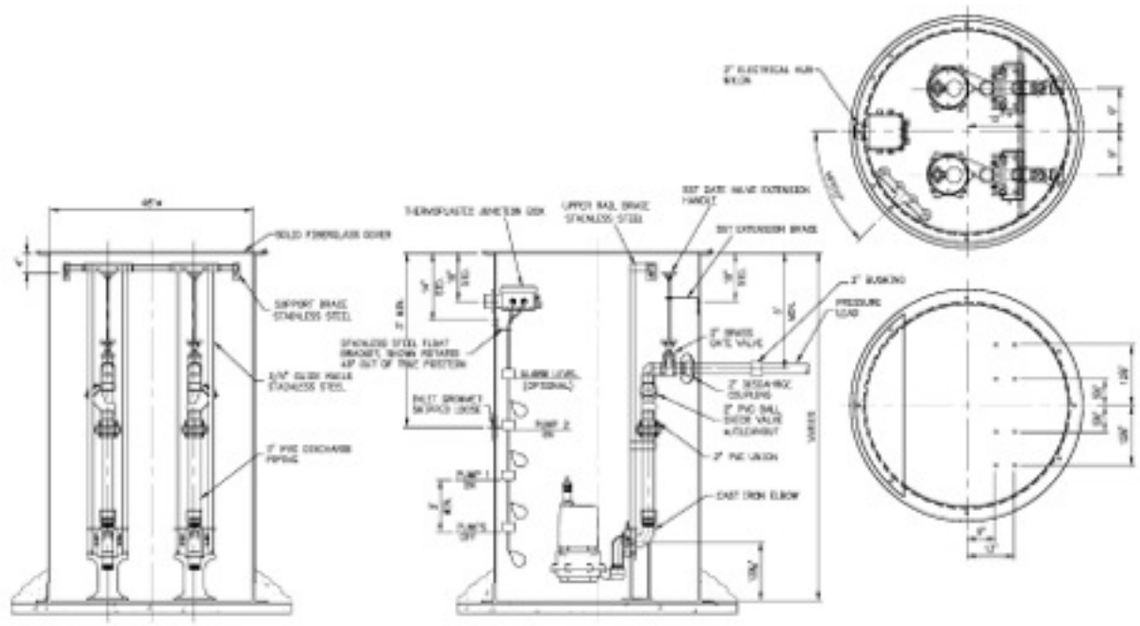

GRINDER PUMP DETAIL

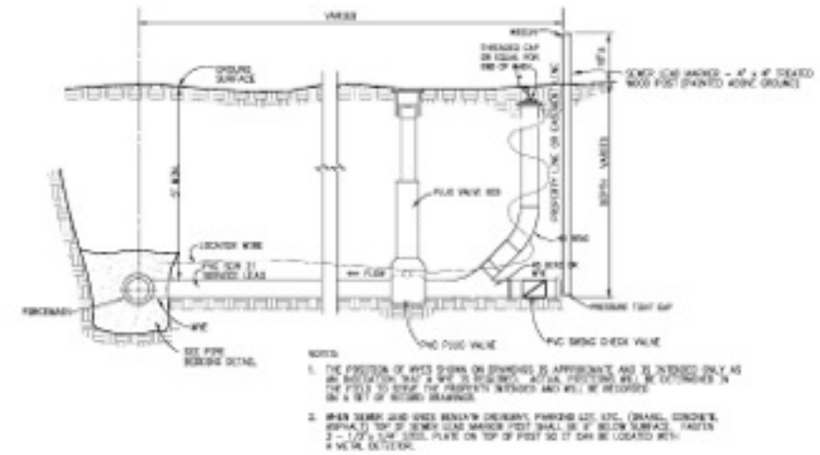

WYE AND FORCEMAIN PRESSURE LEAD INSTALLATION

PUMP #	ROTS SERVED	AVERAGE FLOW	MAX FLOW CHARACTERISTICS
DP-1	2	276	25 GPM @ 50' TDH
DP-2	2	276	25 GPM @ 50' TDH
DP-3	2	276	25 GPM @ 50' TDH
DP-4	11	2880	25 GPM @ 50' TDH
DP-5	5	940	25 GPM @ 50' TDH
DP-6	15	2820	25 GPM @ 50' TDH
DP-7	3	564	25 GPM @ 50' TDH
DP-8	7	1316	25 GPM @ 50' TDH
DP-9	5	940	25 GPM @ 50' TDH

ALTERNATE 'A'

PUMP #	ROTS SERVED	AVERAGE FLOW	MAX FLOW CHARACTERISTICS
DP-10	23	4324	25 GPM @ 50' TDH
DP-11	7	1316	25 GPM @ 50' TDH
DP-12	13	4886	25 GPM @ 50' TDH
DP-13	3	564	25 GPM @ 50' TDH
DP-14	5	940	25 GPM @ 50' TDH
DP-15	5	940	25 GPM @ 50' TDH
DP-16	4	752	25 GPM @ 50' TDH
DP-17	4	752	25 GPM @ 50' TDH

GRINDER PUMP NOTES

1. STATION PACKAGE SHALL BE DUPLEX SUBMERSIBLE STATIONS, MANUFACTURED BY FLOW, MODEL WF3008, NEPTUNE SM GRINDER APPROVED EQUAL AND INCLUDE:
   A. 4' DIA. FIBERGLASS SUMP AND 24" MIN. WIDTH OPENING AND COVER.
   B. TWO (2) EXPLOSION PROOF GRINDER PUMPS, 1 PHASE, 230 V, 1.7 HP, 1750 RPM
   C. 2-2 OUT GUIDE RAILS
   D. CONTROL SYSTEM:
      - AUTOMATIC WITH FOUR (4) FLOATS
      - MANUAL INDEPENDENT OF FLOATS
   E. AUDIBLE/VISUAL ALARM SYSTEM
      - PUMP FAILURE
      - HIGH WATER LEVEL
      - POWER FAILURE
      - SEAL FAILURE
   F. CONTROL PANEL, LOCKABLE NEMA 4X ENCLOSURE
      - MAIN DISCONNECT
      - MOTOR STARTERS WITH UNDER VOLTAGE RELAYS AND OVERLOAD PROTECTION
      - H-O-A SWITCHES
      - CONTROL CIRCUIT BREAKER
      - BLOWER TIME METERS
      - SPACE HEATER W/ THERMOSTAT
      - GENERATOR SET RECEPTACLE
      - MANUAL TRANSFER SWITCH
      - APPLICABLE FUSES, CIRCUIT BREAKERS, SWITCHES AND RELAYS
   G. JUNCTION BOX
   H. INTERNAL DISCHARGE PIPING AND VALVES
   I. SAN VARIABLE START-UP, AND WARRANTY PER SPECIFICATIONS
2. PUMP TANK AND ALARM LEVELS SHALL BE DETERMINED AT THE TIME OF INSTALLATION BASED UPON TANK LOCATIONS AND SEWER LEAD CONNECTIONS. CONTRACTOR SHALL COORDINATE WITH ENGINEER.
3. CONTRACTOR SHALL BE RESPONSIBLE FOR ELECTRICAL SERVICE INCLUDING METER BASE INSTALLATION TO CONTROL PANEL AS COORDINATED WITH UTILITY COMPANY AND ENGINEER AND SIZED APPROPRIATELY TO SERVICE STATION.
4. PROPOSED PUMPS HAVE BEEN SELECTED BASED ON ASSUMPTIONS OF SEWER LEAD DEPTHS AND LOCATIONS. DURING CONSTRUCTION THE CONTRACTOR SHALL FIELD VERIFY AND COORDINATE WITH ENGINEER AND TO ADJUST PUMPS AS NECESSARY BASED UPON FIELD INFORMATION AT NO ADDITIONAL COST TO THE PROJECT.
5. ALL WET WELL CONTROLS, FLOATS, AND WIRING SHALL BE INTRINSICALLY SAFE.
6. INTRINSICALLY SAFE CIRCUITS SHALL BE ISOLATED FROM NON-INTRINSICALLY SAFE CIRCUITS PER NEC.
7. ALL CONDUITS, JUNCTION BOXES, CABLE PENETRATIONS, STRUCTURAL MOUNTS, ETC. SHALL BE SEALED OFF IN ACCORDANCE WITH NEC ARTICLE 500 TO SEPARATE THE WET WELL FROM THE CONTROL PANEL. SEAL LOCATIONS RELATIVE TO JUNCTION BOXES SHALL BE PER NEC.
8. ALL ELECTRICAL EQUIPMENT, WIRING, AND METHODS WITHIN THE WET WELL SHALL BE SUITABLE FOR CLASS I, GROUP D, DIVISION 1 LOCATION AND SHALL COMPLY WITH THE NATIONAL ELECTRIC CODE.
9. CONTROL PANEL SHALL BE CONSTRUCTED IN ACCORDANCE WITH APPLICABLE NEC AND NEMA STANDARDS.
10. SUBMERSIBLE PUMP MOTOR CORDS SHALL BE DESIGNED FOR FLEXIBILITY AND SERVICEABILITY UNDER CONDITIONS OF EXTRA HARD USAGE AND SHALL MEET THE REQUIREMENTS OF THE NATIONAL ELECTRIC CODE FOR PORTABLE CORDS IN WASTE WATER PUMP STATIONS.
11. CONTRACTOR SHALL BE RESPONSIBLE FOR SUPPLYING FOUR (4) SPARE PUMPS, MOTORS, MECHANICAL SEALS, AND WEAR RINGS AT NO ADDITIONAL COST TO THE PROJECT.

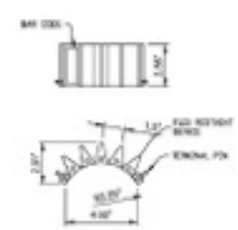

FLEX RESTRAINT DEVICE

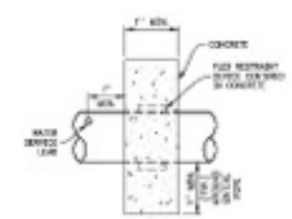

THRUST RESTRAINT DETAIL

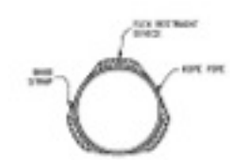

PIPE RESTRAINT DETAIL

NOTE:
TO BE PLACED AT EACH PRESSURE SEWER SERVICE LEAD ON WYE PROVIDED BY FIELD ENGINEER. AS SUPPLIED BY CORVAL PLASTICS, OR EQUAL PER PIPE MANUFACTURER'S SPECIFICATIONS.

Gourdie-Fraser
Municipal | Development | Transportation
www.gourdiefraser.com

TUSCARORA TOWNSHIP
TUSCARORA TOWNSHIP WASTEWATER COLLECTION SYSTEM
GRINDER STATION DETAILS
SECTION 24, 25, & 30 T.35 N., R.3 W.
TUSCARORA TOWNSHIP, CHEBOYGAN COUNTY, MICHIGAN

These documents are prepared in accordance with the contractual terms and conditions for this project.

11354

SHT 32 OF 33

Simplex Pump

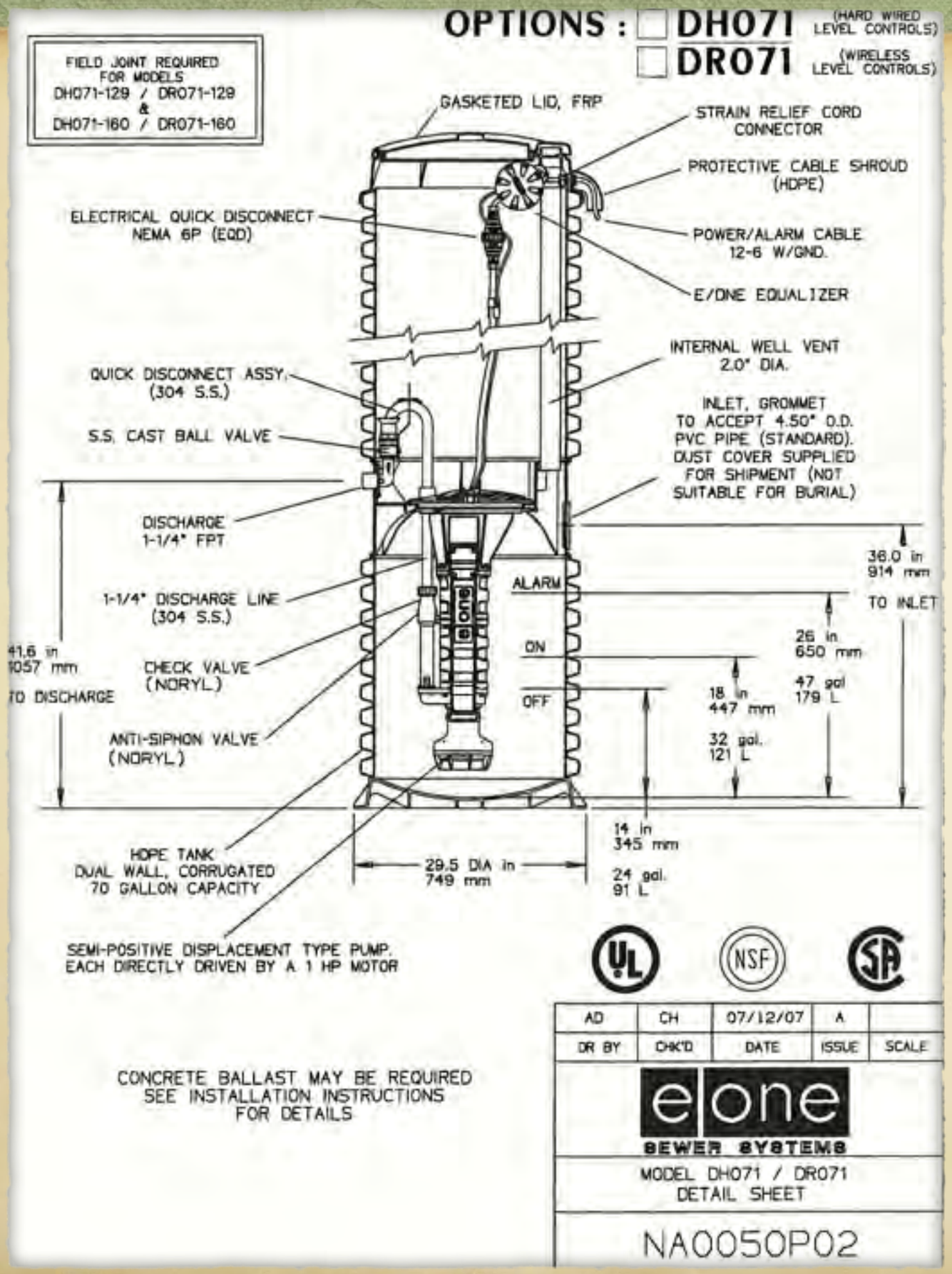

TUSCARORA TOWNSHIP

Basement Sewage Ejector

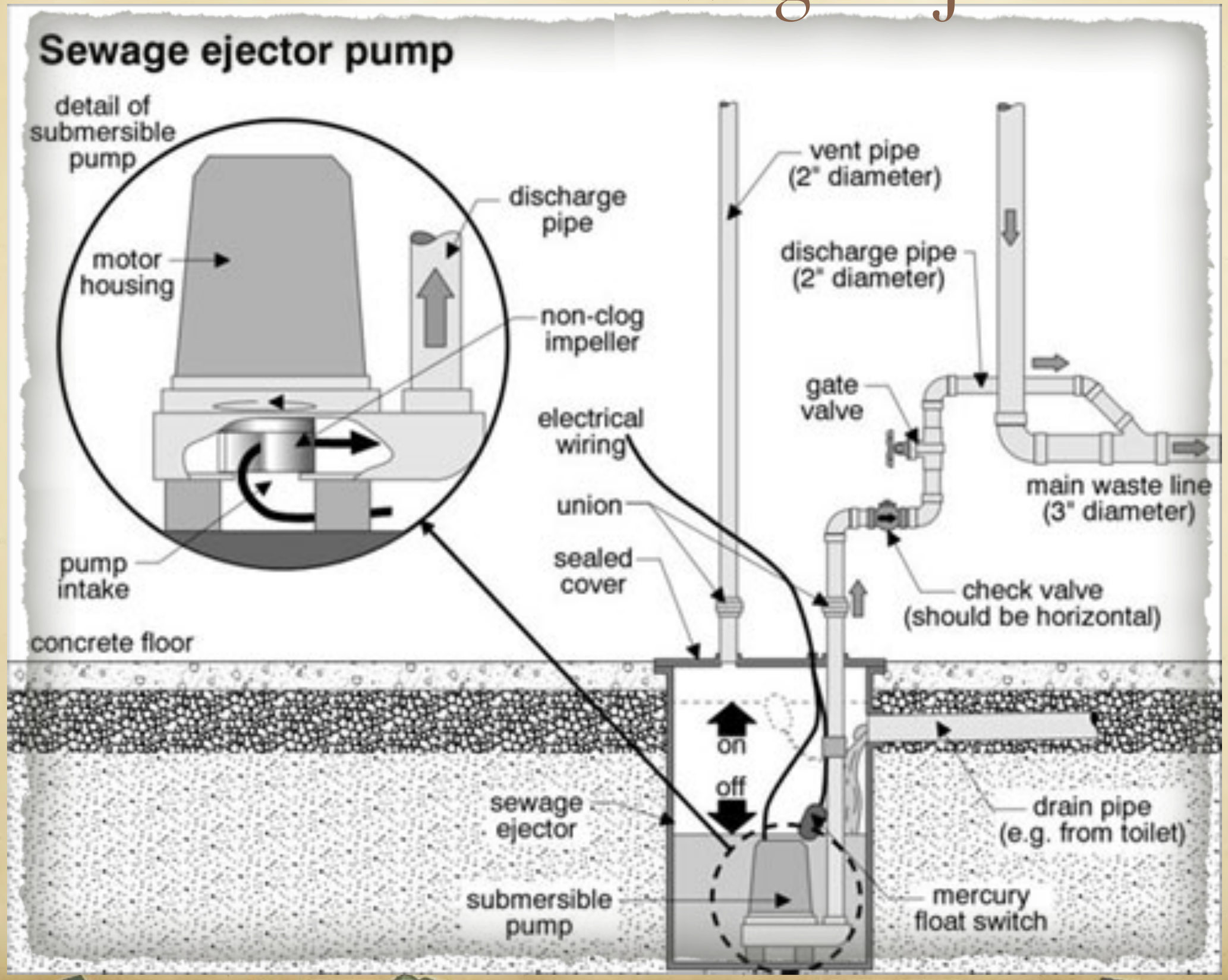

TUSCARORA TOWNSHIP

Concerns about grinder pumps

- Mid 1990's system
- large # of simplex grinders
- Electricity hook up to individual houses
- Electricity charges by homeowner
- on private property
- pump issues

TUSCARORA TOWNSHIP

What is in current system

Duplex grinders

- dual pumps
- slide rails
- approx. 400 gal. tankage
- alarm with battery backup
  horn & light

Located in ROW

  independent power supply

All pumps are interchangeable

- 4 spare pumps in bid package
- other spare parts

TUSCARORA TOWNSHIP

Pump station & wet well similar – both 48”

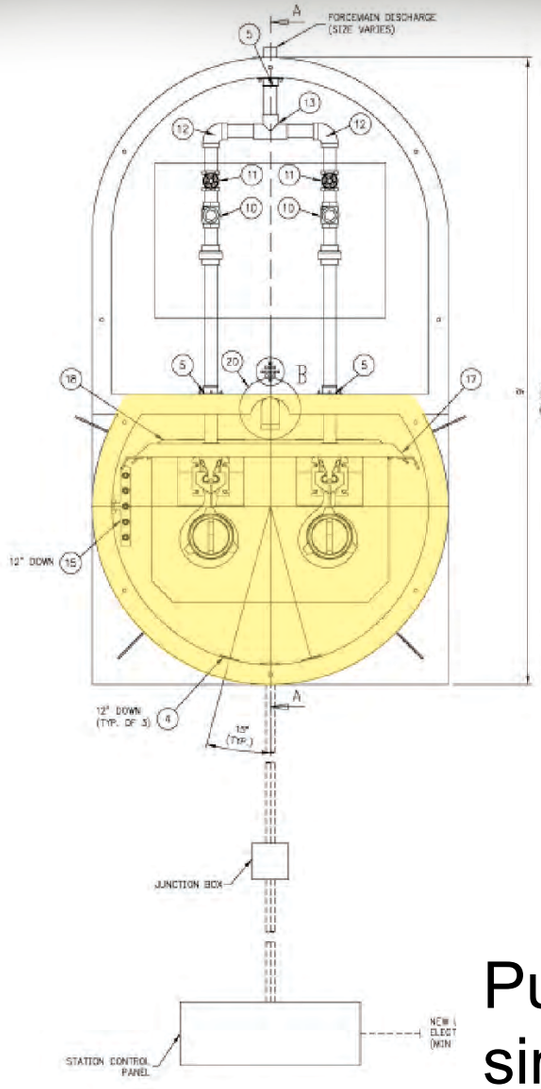

PUMP STATION PLAN VIEW

SCALE: NOT TO SCALE

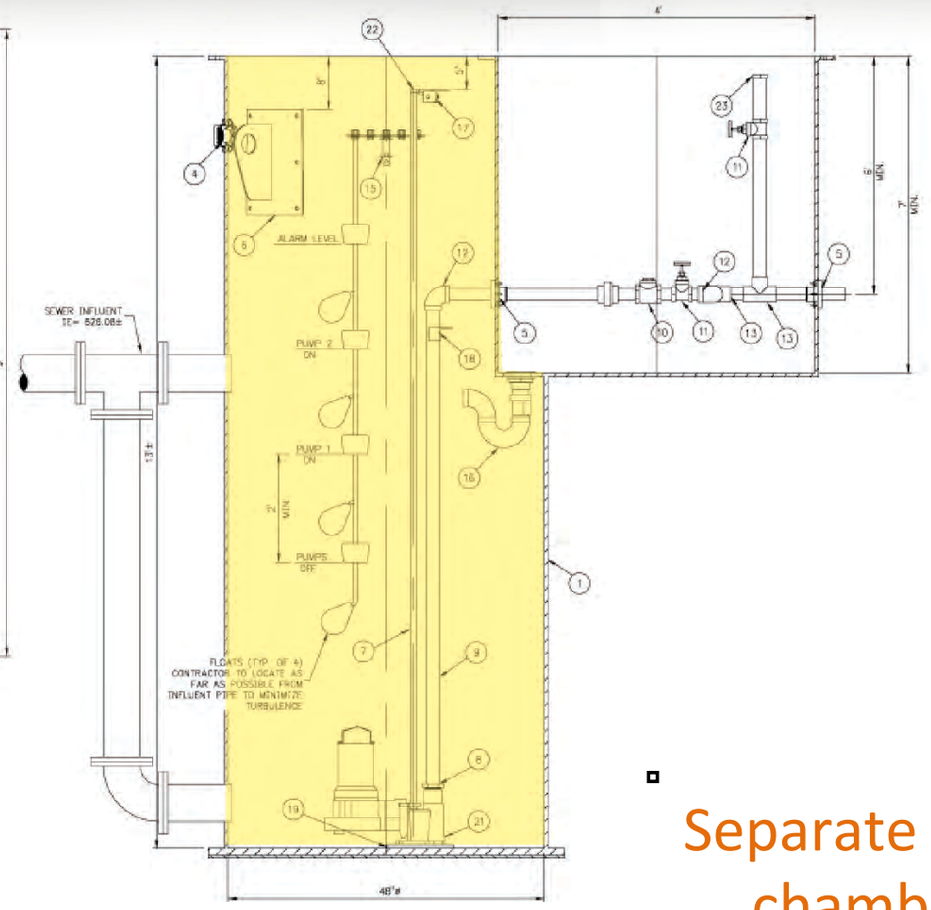

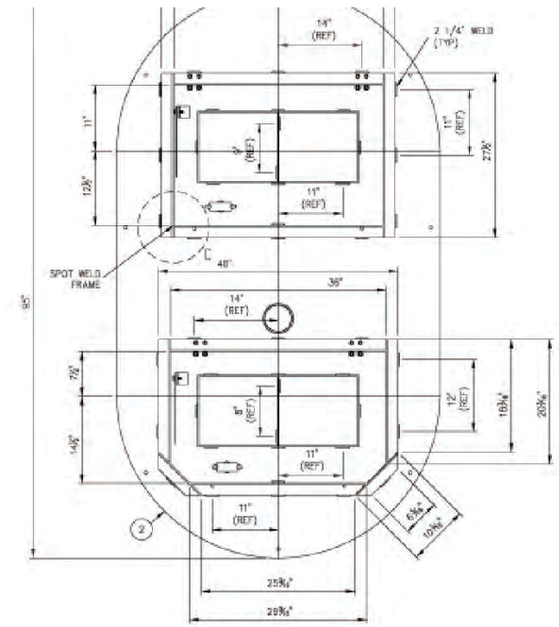

PUMP STATION PLAN VIEW

SCALE: NOT TO SCALE

Separate valve chamber, different

Pump station & wet well similar – both 48”

Remotely transmitted controls, different

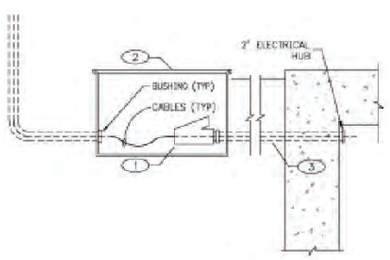

JUNCTION BOX DETAIL

SCALE: NOT TO SCALE

NOTES:

1. CONDUIT SEAL-OFF
2. FLUSH MOUNTED ACCESS BOX
3. 1/2" RIGID CONDUIT FOR GROUND WIRE

ITEM NO.	DESCRIPTION
1	48" X 192" FG BASIN W/STL. ANTI-FLOAT & 48"X 48" FLATWALL VB
2	ALUMINUM HATCH COVER
3	4" ALUMINUM COUPLING – WELDED IN COVER
4	1 1/2" THREADED BOLT-ON FG COMPOSITE COUPLING
5	FLEX BOOT FITTING FOR PIPING
6	I.E. STEEL LIFTING LUG
7	3/4" 304 STAINLESS STEEL PIPE
8	THREADED SCH80 PVC BUSHING AS NEEDED
9	2" SCH80 PVC PIPE
10	2" BRASS THREADED SWING CK VALVE
11	2" BRASS THREADED GATE VALVE
12	2" SCH80 PVC 90°ELBOW (SW)
13	2" SCH80 PVC TEE (SW)
14	2" SCH80 PVC UNION (SW)
15	304 SS FLOAT BRACKET W/5 CORD GRIPS & MOUNTING BRACKET
16	PVC VALVEBOX GRAVITY DRAIN WITH CHECK VALVE (GAS AND WATER TIGHT)
17	ALUMINUM UPPER GUIDERAIL BRACE FOR 48" TANK
18	ALUMINUM SHIPPING BRACING FOR 48" BASIN
19	5/8" X 10" X 10" CHOPPED FIBERGLASS STUG BASE PLATE
20	VENT W/ STAINLESS STEEL CLOSE NIPPLE
23	2" QUICK CONNECT CAMLOCK & CAP, COORDINATE WITH OWNER FOR COMPATIBILITY.

CONTRACTOR SUPPLIED ITEMS

ITEM NO.	ITEMS TO BE SHIPPED LOOSE
21	2" BASE ELBOW
22	UPPER GUIDERAIL BRACKET

GRINDER PUMP NOTES

1. STATION PACKAGE SHALL BE DUPLEX STATION AS SUPPLIED BY KERR PUMP AND SUPPLY, KENNEDY INDUSTRIES, WILAN SUPPLY OR ENGINEER APPROVED EQUAL AND INCLUDE: (REFER TO SPECIFICATION 12A FOR ADDITIONAL DETAILS)
   A. 4' DIA. FIBERGLASS SUMP AND VALVE CHAMBER WITH 24" MIN. ACCESS OPENING AND LOCKABLE HINGED ACCESS HATCH. VALVE CHAMBER TO INCLUDE ACCESS LADDER.
   B. EXPLOSION PROOF GRINDER PUMPS, 230V, 3ø
   C. E-Z OUT GUIDE RAILS W/ STAINLESS STEEL LIFTING CHAINS.
   D. CONTROL SYSTEM:
      - AUTOMATIC WITH FOUR (4) FLOATS
      - MANUAL INDEPENDENT OF FLOATS
   E. RTU WITH AUDIBLE/VISUAL ALARM SYSTEM:
      - PUMP FAILURE
      - HIGH WATER LEVEL
      - POWER FAILURE
      - SEAL FAILURE
   F. CONTROL PANEL, LOCKABLE NEMA 4 OR 3R ENCLOSURE:
      - MAIN DISCONNECT
      - MOTOR STARTERS W/ VOLTAGE RELAYS AND OVERLOAD PROTECTION (SURGE SUPPRESSION)
      - H-O-A SWITCHES
      - CONTROL CIRCUIT BREAKER
      - GFI RECEPTACLE
      - ELAPSED TIME METERS
      - SPACE HEATER W/ THERMOSTAT
      - GENERATOR SET RECEPTACLE
      - MANUAL TRANSFER SWITCH
      - APPLICABLE FUSES, CIRCUIT BREAKERS, SWITCHES AND RELAYS
   G. EXTERIOR IN-GRADE JUNCTION BOX
   H. INTERNAL DISCHARGE PIPING AND VALVES
   I. O&M MANUALS, START-UP, AND WARRANTY PER SPECIFICATIONS
2. PUMP TANK AND ALARM LEVELS SHALL BE DETERMINED AT THE TIME OF INSTALLATION BASED UPON TANK LOCATIONS AND SEWER LEAD CONNECTIONS. CONTRACTOR SHALL COORDINATE WITH ENGINEER AND MAWSA.
3. CONTRACTOR SHALL BE RESPONSIBLE FOR ELECTRICAL SERVICE INCLUDING METER BASE INSTALLATION TO CONTROL PANEL AS COORDINATED WITH UTILITY COMPANY AND OWNER AND SIZED APPROPRIATELY TO SERVICE STATION.
4. PROPOSED PUMPS HAVE BEEN SELECTED BASED ON ASSUMPTIONS OF SEWER LEAD DEPTHS AND LOCATIONS. DURING CONSTRUCTION THE CONTRACTOR SHALL COORDINATE WITH ENGINEER AND OWNER TO ADJUST PUMPS AS
5. ALL WET WELL CONTROLS, FLOATS, AND WIRING SHALL BE INTRINSICALLY SAFE.
6. INTRINSICALLY SAFE CIRCUITS SHALL BE ISOLATED FROM NON-INTRINSICALLY SAFE CIRCUITS PER NEC.
7. ALL CONDUITS, JUNCTION BOXES, CABLE PENETRATIONS, STRUCTURAL MOUNTS, ETC. SHALL BE SEALED OFF IN ACCORDANCE WITH NEC ARTICLE 500 TO SEPARATE THE WET WELL FROM THE CONTROL PANEL. SEAL LOCATIONS RELATIVE TO JUNCTION BOXES SHALL BE PER NEC.
8. ALL ELECTRICAL EQUIPMENT, WIRING, AND METHODS WITHIN THE WET WELL SHALL BE SUITABLE FOR CLASS 1, GROUP D, DIVISION 1 LOCATION AND SHALL COMPLY WITH THE NATIONAL ELECTRIC CODE.
9. CONTROL PANEL SHALL BE UL LISTED NEMA 4 OR 3R AND CONSTRUCTED IN ACCORDANCE WITH APPLICABLE NEC AND NFPA STANDARDS.
10. SUBMERSIBLE PUMP MOTOR CORDS SHALL BE DESIGNED FOR FLEXIBILITY AND SERVICEABILITY UNDER CONDITIONS OF EXTRA HARD USAGE AND SHALL MEET THE REQUIREMENTS OF THE NATIONAL ELECTRIC CODE FOR FLEXIBLE CORDS IN WASTE WATER PUMP STATIONS.
11. CONTRACTOR SHALL BE RESPONSIBLE TO VERIFY WATER TABLE AND COORDINATE WITH ENGINEER FOR BUOYANCY TO ADJUST BALLAST VOLUME AND INSTALL AS NECESSARY AT NO ADDITIONAL COST TO THE PROJECT. APPROX. 4 CY OF EXTERNAL CONCRETE BALLAST ARE ESTIMATED AND SHALL BE PROVIDED IN ADDITION TO INTEGRAL BASE SHOWN ON THE DRAWING PER STATION.
12. ELECTRICAL SERVICE, JUNCTION BOX, METER BASE, AND ANY OTHER EQUIPMENT PROVIDING POWER TO THE CONTROL PANEL AND INSTALLATION OF SHALL BE COORDINATED WITH CONSUMERS ENERGY AND PUMP STATION SUPPLIER.
13. CONTRACTOR SHALL BE RESPONSIBLE TO VERIFY WATER TABLE AND COORDINATE WITH ENGINEER FOR BUOYANCY TO ADJUST BALLAST VOLUME AND INSTALL AS NECESSARY AT NO ADDITIONAL COST TO THE PROJECT. APPROX. 5 CY OF EXTERNAL CONCRETE BALLAST ARE ESTIMATED AND SHALL BE PROVIDED IN ADDITION TO INTEGRAL BASE SHOWN ON THE DRAWING PER STATION.
14. STAINLESS STEEL TO BE USED FOR ALL ANGLE IRON, PLATES, BRACKETS, AND FITTINGS INSIDE PUMP STATION. ALL CONDUIT TO BE LISTED CORROSIVE RESISTANT AND RIGID.

Gourdie-Fraser
Municipal | Development | Transportation
PH: 231 946-3614
FAX: 231 946-3703
www.gourdiefraser.com
123 W Front Street
Traverse City, MI 49684

TUSCARORA TOWNSHIP
TUSCARORA TOWNSHIP WASTEWATER COLLECTION SYSTEM
PUMP STATION NO. 2 DETAILS
SECTION 24, 25, & 30 T.35 N., R.3 W.
TUSCARORA TOWNSHIP, CHEBOYGAN COUNTY, MICHIGAN

DR: G. BALLANCE
CK: E. GOODRICH
JOB NO: 11354

Pump Station

Project Schedule

SAD - Tax bill

TUSCARORA
TOWNSHIP

Why is a Sewer System Critical to Indian River

- Many existing septic systems pre-date permits and records of late 1960s. Addresses are often listed as rural route numbers with no physical street address.

- Some "septic systems" are simple collection pits with inadequate or nonexistent drain fields

- Health Department officials have seen homeowner septic dye tests released into the river after flowing into surface water runoff and storm drains. In fact, some older septic systems remain connected into storm water runoff drains.

- Limits have been mandated by the Health Department on food services within the area, including water use limits – customer seating – and limiting certain foods and preparation processes.

- For commercial use, the isolation distance between septic discharge to sewer drain fields / septic tanks and water wells is 75ft. Many properties in the area do not have available space to maintain this minimum isolation distance.

- There is a strong possibility the Health Department will not allow on-site permits to build new septic drain fields, which would have a significant impact on the economic viability of the area

TUSCARORA
TOWNSHIP

QUESTIONS ?